NAKANISHI

OM-KK1022MA 000

クーラントスルーモータスピンドル / Coolant Through Motor Spindle

CTMF - 3130

取扱説明書 / OPERATION MANUAL

日本語 : P1 - P23 / English : P25 - P47

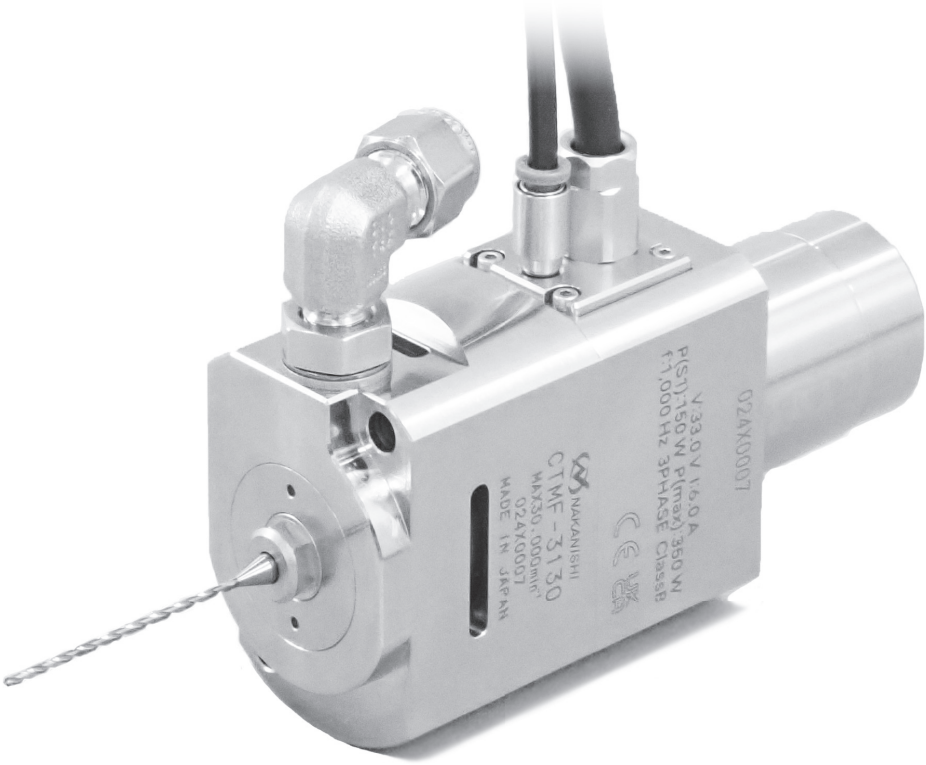

Thank you for purchasing Coolant Through Spindle CTMF-3130. This spindle is designed for use with small-diameter cutting drills with a coolant hole. This spindle is compatible with the Standard Rotary Tool GSC1310 from Citizen Machinery co.,Ltd. that the customer is currently using, and it can be replaced and used interchangeably. The E3000i CONTROLLER, Motor Cord, and Air Line Kit are required to drive this spindle. Carefully read the operation manuals for each associated component before use. For future reference, keep this operation manual accessible to all users.

CONTENTS

1. CAUTIONS FOR HANDLING AND OPERATION P25
2. BASIC PACKAGE P28
3. WARRANTY P29
4. CONTACT US P29
5. FEATURES P29
6. SPECIFICATIONS AND DIMENSIONS P30
7. INSTALLING THE COLLET DRILL P33
8. CHANGING THE DRILL P34
9. REPLACING THE COLLET P35
10. CONNECTION OF MOTOR CORD AND AIR SUPPLY P36
11. INSTALLING THE HIGH-PRESSURE PUMP, COOLANT HOSE AND FITTINGS P38
12. SUPPLYING THE COOLANT P44
13. INSTALLING THE MOTOR SPINDLE P44
14. BREAK-IN PROCEDURE P45
15. CAUTIONS WHEN USING CUTTING DRILLS P46
16. TROUBLESHOOTING P47
17. DISPOSAL OF THE SPINDLE P47

1. CAUTIONS FOR HANDLING AND OPERATION

■ Read these warnings and cautions carefully and only use in the manner intended.

■ These warnings and cautions are intended to prevent potential hazards that could result in personal injury or damage to the device. They are classified as follows in accordance with the seriousness of the risk.

Class	Degree of Risk
⚠WARNING	**This indicates the presence of a hazard that could result in personal injury or damage to the device if the safety instructions are not followed properly.**
⚠CAUTION	**This indicates a potential hazard that could result in minor or moderate personal injury or damage to the device if the safety instructions are not followed properly.**

ENGLISH

⚠ WARNING

(1) The spindle is not a hand tool. It is designed to be installed and used in machine tools or special purpose machines.

(2) Do not touch the cutting tool while it is running. It is very dangerous.

(3) Wear safety glasses and a dust mask, and use a protective cover around the spindle whenever the spindle is rotating.

(4) Never connect, disconnect or touch the Power Cord Plug or Motor Cord Plug with wet hands. This may cause an electric shock.

(5) Never operate or handle the spindle until you have thoroughly read the Operation Manual and safe operation has been confirmed.

1) To prevent injury and damage, check the spindle and cutting tool for proper installation before operating the spindle.

2) Before disconnecting the spindle, check the safety of the spindle and cutting tool, turn OFF the control power, stop the supply of coolant and compressed air, and release the residual coolant and compressed air from the system.

(6) When installing the spindle, make sure that the fixed base is grounded to the machine tool in order to avoid the risk of an electric shock.

(7) When installing a drill, tighten the collet properly and check the collet and collet nut again before use. Do not overtighten the collet. Doing so may cause damage to the spindle.

(8) Do not use poor-quality drills (poor balance, large runout, scratches on the shank, and so on). Such drills could break when used, resulting in injury to operators. When using a new drill, start at a low speed and check to make sure it operates safety, gradually increasing the rotation speed.

(9) Do not exceed the maximum recommended allowable drill speed. For your safety, use speeds below the maximum allowable speed.

(10) Do not apply excessive force. This may cause drill slippage, drill damage, injury to the operator or loss of concentricity and precision.

(11) When operating the high-pressure pump, take safety measures by using protective covers for the high-pressure pump and hose fitting and other parts.

(12) When using coolant, check the operating pressure before connecting the coolant hose and fittings. If the maximum operating pressure of the coolant hose or fittings is exceeded, they could burst and cause injury.

(13) Connect the coolant hose and fittings securely. A coolant leak could cause injury or damage the device.

(14) When using an oil-based coolant, the coolant may be dispersed as a fine mist that could ignite. Implement fire prevention measures such as the use of dust collectors and automatic fire extinguishers.

(15) If there is residual pressure in the high-pressure pump, the drill may pop out, resulting in injury. Make sure that there is no residual pressure before replacing the drill.

⚠ CAUTION

(1) A supply of coolant is required when using this spindle. If the spindle is used without supplying coolant, the generated heat could damage the components.
(2) Use coolant with an ISO viscosity grade of VG22 or lower.
(3) Do not drop or hit the spindle, as shock can damage the internal components.
(4) Do not use an end mill or grinding wheel. Load applied during machining could result in rotation failure due to seizure of the collet nut or other malfunction.
(5) Be sure to clean the collet, the collet nut and the inside of the spindle before replacing the drill. If dust or metal chips stick to the inside of the spindle or the collet, damage to the collet or spindle can occur due to the loss of precision.
(6) When cleaning the spindle, stop the motor and remove debris with a soft brush or a cloth. Never blow compressed air into the wrench flats section (refer to section "6 - 2 Outside View"), as dust or cutting debris may get into the ball bearings and cause damage.
(7) Always clean the drill shank before installing the drill in the spindle. Foreign matter in the collet or collet nut may cause excessive run-out that could damage the cutting drill or spindle.
(8) Use a cutting drill with a shank diameter that is within a tolerance of + 0 ~ - 0.01 mm of the collet diameter.
(9) Select suitable products or drills for all applications. Do not exceed the capabilities of the spindle or drills.
(10) To prevent dust from entering while the machine is operating, do not stop the supply of cooling air from the motor. If the supply of cooling air is stopped while coolant and cutting oil is being supplied, the air purge will be lost and the coolant and cutting oil may enter the spindle and cause damage.
(11) When using an external supply of cutting fluid in addition to the coolant, ensure that the cutting oil is sprayed directly on the cutting edge while machining is performed. Avoid spraying the spindle as much as possible.
(12) If abnormal rotation or vibration occurs while operating the spindle, immediately stop working and perform inspection. (Refer to section "16. TROUBLESHOOTING".)
(13) Check the cutting drill, collet, collet nut, coolant hose and fittings for damage and wear each day before and after work.
(14) The collet and collet nut are consumable parts. If the collet or collet nut shows signs of wear or damage, replace it before a malfunction or additional damage occurs.
(15) When storing this product, wipe off any moisture, etc. that may have adhered to it. Failure to do so may cause rusting.
(16) Before operating for the first time after installation, repair, or a long period of non-operation, refer to section "14. BREAK-IN PROCEDURE". When checking the spindle, no vibration or unusual sound should be observed during rotation.
(17) Do not disassemble, modify or attempt to repair the spindle. Otherwise, the performance cannot be guaranteed and subsequent repair requests may be denied.
(18) When using the spindle for mass production, please purchase another spindle as aspare in case of emergency.

2. BASIC PACKAGE

When opening the package, check if it includes all items listed in"Table. 1 Packing List Contents".
In the event of any shortage, please contact either NAKANISHI (refer to section "4. CONTACT US") or your local dealer.

Table. 1　Packing List Contents

Spindle · · · 1 pc 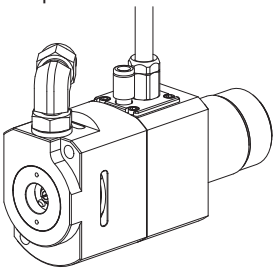	Wrench (8 × 5) · · · 1 pc 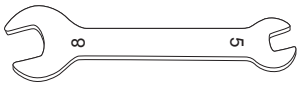
Wrench (9 × 11) · · · 1 pc 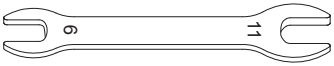	Hexagon socket bolt (M5 × 80)· · · 2 pcs 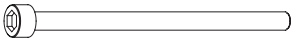
Operation Manual · · · 1 set	Inspection Card · · · 1 pc

3. WARRANTY

The company provide a limited warranty for our products. The company will repair or replace the products if any of the cases (1) to (3) below occur.
Please contact Nakanishi Inc (refer to section "4. CONTACT US") or your local dealer for details.

(1) Defect in manufacturing
(2) Shortage of components in the package
(3) Damaged components found when initially opening the package
(This shall not apply if the damage was caused by the negligence of the customer.)

4. CONTACT US

For your safety and convenience when purchasing our products, we welcome your questions.
If you have any questions about operation, maintenance and repair of the product, please contact us.

Contact Us

- For U.S. Market

Company Name	:	NSK America Corp. Industrial Div.
Business Hours	:	8:00 to 17:00 (CST) (closed Saturday, Sunday and Public Holidays)
U.S. Toll Free No.	:	+1 800 585 4675
Telephone No.	:	+1 847 843 7664
Fax No.	:	+1 847 843 7622
Website	:	www.nskamericacorp.com

- For Other Markets

Company Name	:	NAKANISHI INC.
Business Hours	:	8:00 to 17:00 (JST) (closed Saturday, Sunday and Public Holidays)
Telephone No.	:	+81 289 64 3520
e-mail	:	webmaster-ie@nsk-nakanishi.co.jp

5. FEATURES

(1) Coolant can be supplied and discharged from a cutting drill with a coolant hole, enabling deep hole drilling and high-efficiency machining.
(2) The spindle supports a coolant pressure of up to 20 MPa.
(3) With the coolant supply compactly positioned in the front part of the motor spindle, it can be installed in automatic lathes produced by machine tool manufacturers.

6. SPECIFICATIONS AND DIMENSIONS

6 - 1 Specifications

Model	CTMF-3130
Max RPM	30,000 min^{-1}
Spindle Accuracy	Within 1 μm
Weight	1,100 g
Noise Level (at 1 m Distance)	60 dB (A) or less
Max. Output	350 W
Motor Cord Type (Option)	EMCD-3000i-3M (3 m) / EMCD-3000i-5M (5 m) / EMCD-3000i-7M (7 m)
Quick Disconnect Cord Length	0.5 m
IP Code	IP57
Compatible Rotary Tool	GSC1310 (manufactured by Citizen Machinery Co.,Ltd.)
Applicable CNC Lathes	A20, D25, L20, L32, M32, etc.

< Coolant specifications >

Supply Fluid	Coolant (ISO viscosity grade of VG22 or lower)
Pressure	3.0 - 20.0 MPa
Filtration Accuracy	5 μm or less
Supply Hose / Fittings (Provided by Customer)	Pressure resistance of 20.0 MPa or more

	Temperature	Humidity	Atmospheric Pressure
Operation Environment	0 - 40 °C	MAX. 75 % (No condensation)	800 - 1,060 hPa
Transportation and Storage Environment	-10 - 50 °C	10 - 85 %	500 - 1,060 hPa

< Options >

Collet Size	ϕ3.0 mm	ϕ3.175 mm	ϕ4.0 mm
Collet (CHA-□□AA) *Note 1	CHA-3.0AA	CHA-3.175AA	CHA-4.0AA
Collet Nut (CHN-CTA-□□) *Note 1	CHN-CTA-3.0	CHN-CTA-3.175	CHN-CTA-4.0
Motor Cord (EMCD-3000i-□M) *Note 2	Motor Cord Length : 3 m, 5 m, 7 m (The Air Hose of the same length is attached.)		

*Note 1: The Collet and the Collet Nut are sold separately. Please match the collet and collet nut size for your application.

*Note 2: The Motor Cord is sold separately. Please select the suitable motor cord length for your application.

6 - 2 Compatibility

The CONTROLLER is compatible with the following overseas safety standard.

・Safety standard in North America (UL,CSA)
UL1004-1

C US
CSA C22.2 No.100

・European Directive
Low Voltage Directive

CE
IEC/EN 60034-1

6 - 3 Outside View

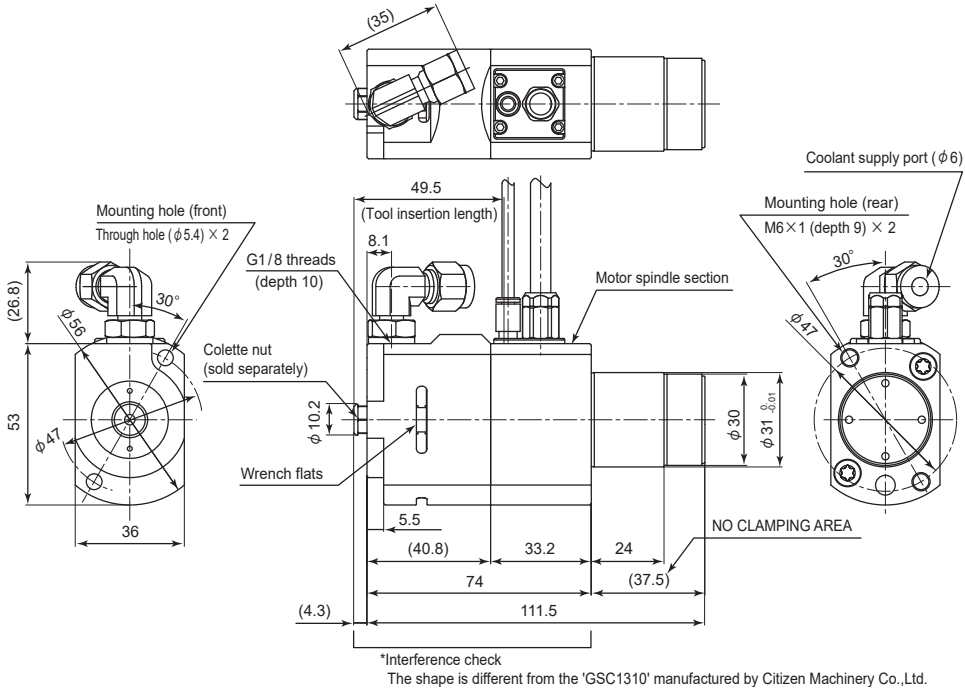

Fig. 1

ENGLISH

6 - 4 Torque Characteristics

30,000min-1

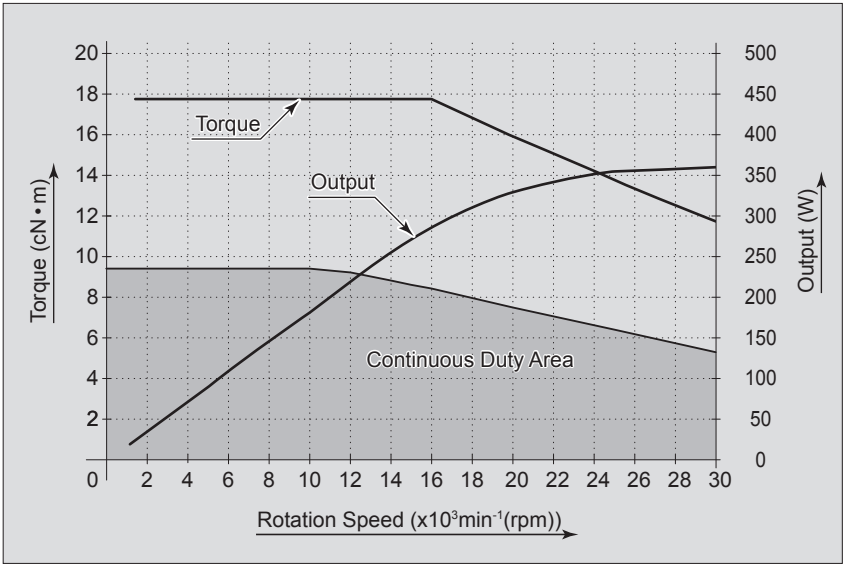

Fig. 2

7. INSTALLING THE COLLET DRILL

⚠ CAUTION

- **Be sure to clean the collet, the collet nut and the inside of the spindle before installing the collet or the cutting drill. If dust or metal chips stick to the inside of the spindle or the collet, damage to the collet or spindle can occur due to the loss of precision.**
- **When installing the collet in the collet nut, make sure that the tabs of the collet nut are properly seated in the groove of the collet. If the tabs are not properly seated when you tighten the collet nut, the collet may become stuck inside the spindle.**
- **Never tighten the collet nut without inserting a drill in the collet. Excessively tightening the collet may damage the tabs that hold the collet in the collet nut, making it difficult to remove the collet from the spindle.**
- **Keep the overhang length to a minimum when installing the drill. If the overhang length is too long, the drill may bend and cause injury.**

(1) Hold the collet nut in one hand, and install the collet. (Fig. 3)
If the collet is difficult to install, tilt the collet to one side when inserting it, so that the tabs can more easily be seated in the groove. (Fig. 3, Fig. 4)
At this time, make sure that the tabs of the collet nut are properly seated in the groove of the collet. (Fig. 5)
(2) Insert the drill into the collet, and attach the drill and the collet nut to the spindle shaft.(Fig. 6)
(3) Place the provided 8mm wrench on the wrench flats of the spindle shaft.
(There are three pairs of wrench flats. Position the wrench on the flats so that it is easy to hold.)
(4) Place the provided 9mm wrench on the collet nut and turn the collet nut clockwise to secure the drill.
『Reference tightening torque：6N・m（CHA-3.0/3.175/4.0 use）』
(5) Check the runout of the drill. If runout is excessive, loosen the collet and turn it 90°. Then refasten the drill.

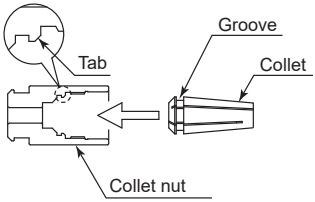

Fig. 3

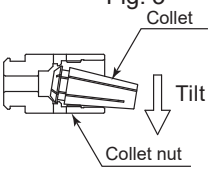

Fig. 4

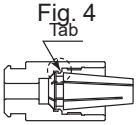

Fig. 5

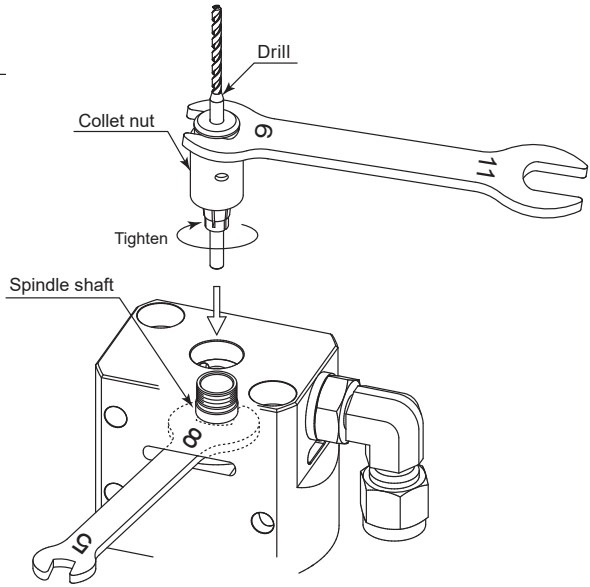

Fig. 6

ENGLISH

8. CHANGING THE DRILL

⚠ WARNING

If there is residual pressure in the high-pressure pump, the drill may pop out, resulting in injury. Make sure that there is no residual pressure before replacing the drill.

⚠ CAUTION

- **Never tighten the collet nut without inserting a drill in the collet. Excessively tightening the collet may damage the tabs that hold the collet in the collet nut, making it difficult to remove the collet from the spindle.**
- **Keep the overhang length to a minimum when installing the drill. If the overhang length is too long, the drill may bend and cause injury.**

(1) Place the provided 8mm wrench on the wrench flats of the spindle shaft.
(There are three pairs of wrench flats. Position the wrench on the flats so that it is easy to hold.)
(2) Place the provided 9mm wrench on the collet nut and turn it counterclockwise to loosen the collet and remove the drill. (The first turn of the collet holder is stiff. Keep turning through the stiffness and the collet will open.)
(3) Insert the new drill and turn the collet nut clockwise to secure the drill.
(4) Check the runout of the drill. If runout is excessive, loosen the collet and turn it 90°. Then refasten the drill.

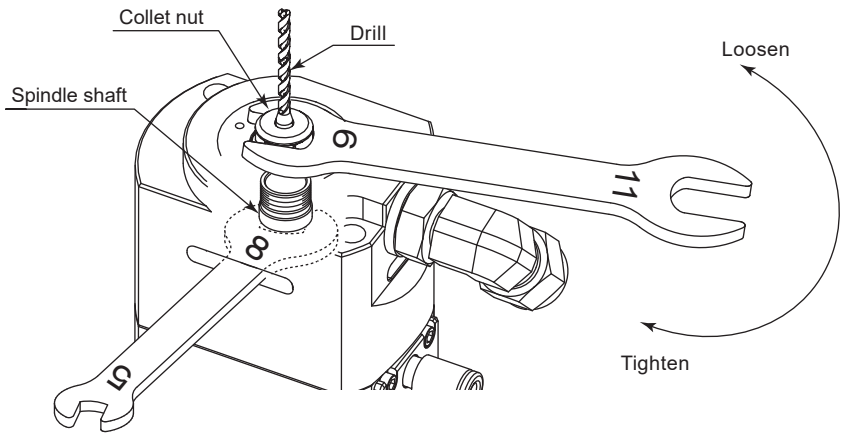

Fig. 7

9. REPLACING THE COLLET

⚠ CAUTION

- **The collet and collet nut are consumable parts and will wear out with use. Replace the collet or collet nut if collet force decreases or there are signs of wear or scratches.**
- **When installing the collet in the collet nut, make sure that the tabs of the collet nut are properly seated in the groove of the collet. If the tabs are not properly seated when you tighten the collet nut, the collet may become stuck inside the spindle.**

(1) Loosen the collet nut with the drill installed as described in section "8. CHANGING THE DRILL". Keep turning the collet nut until it comes out of the spindle shaft together with the drill, and then remove the drill from the collet. (Fig. 8)

(2) Hold the collet nut in one hand, and tilt the collet to one side to release it. If the collet is not released, try tilting it to the other side. (Fig. 9)

(3) Hold the collet nut in one hand, and install the collet. (Fig. 10)
If the collet is difficult to install, tilt the collet to one side when inserting it, so that the tabs can more easily be seated in the groove. (Fig. 9, Fig. 10)
At this time, make sure that the tabs of the collet nut are properly seated in the groove of the collet. (Fig. 11)

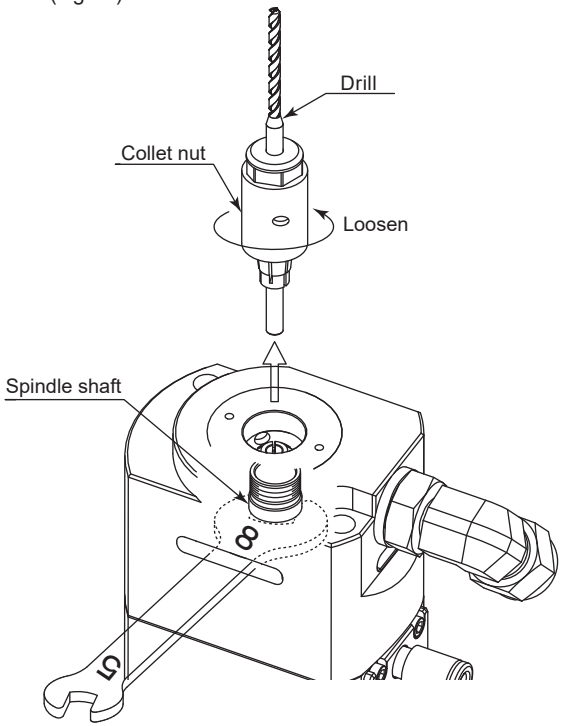

Fig. 8

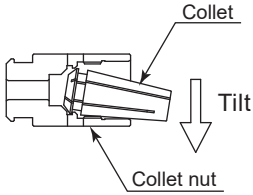

Fig. 9

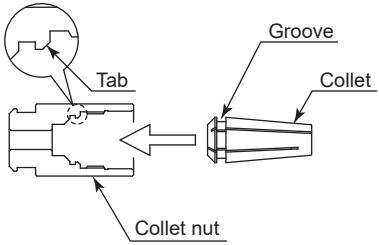

Fig. 10

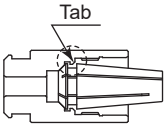

Fig. 11

ENGLISH

10. CONNECTION OF MOTOR CORD AND AIR SUPPLY

10 - 1 Connection of the Motor Cord

⚠ WARNING

- **Before connecting to the Motor Cord Plug, make sure the Main Power Switch on the CONTROLLER is turned OFF. If the Main Power Switch on the CONTROLLER is ON while connecting the Motor Cord Plug, damage may cause to the CONTROLLER.**
- **Install the connector cover (protective cap etc.) to prevent damage or contamination to the Motor Cord Plug when not in use.**

(1) Remove the Protective Cover of the Motor Cord.

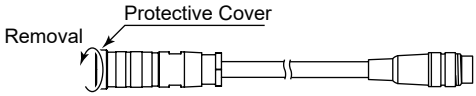

Fig. 12

(2) Ensure Alignment pin upward. Carefully insert the Alignment pin into the Alignment hole and push straight into the motor connector of the Motor Cord Side.

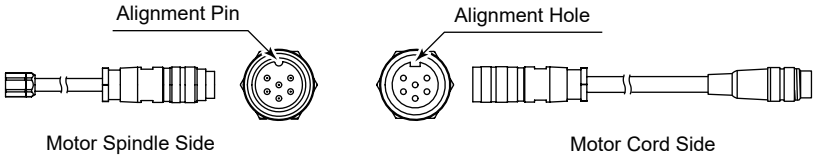

Fig. 13

(3) Tighten the Coupling Nut.

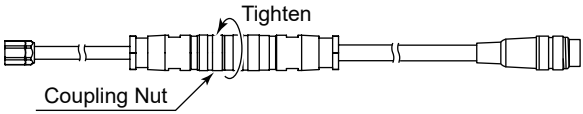

Fig. 14

(4) Remove the protective air inlet quick disconnect cover.

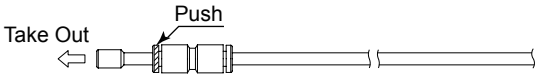

Fig. 15

(5) Insert the provided air hose.

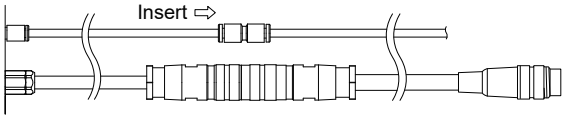

Fig. 16

10 - 2 Air Supply

The air pressure requirement varies with the number of the motor connections and the length of the hose (quick disconnect cord and motor cord). Verify the number of spindles and cable length before setting the pressure according to Table 2.

⚠ CAUTION

- **"Hose Length" indicates total hose length consisting of the Quick Disconnect Hose and the motor cord hose. See Fig. 17 and Table 2 to see how to calculate "Hose Length".**
- **When connecting the two motor spindles to the Controller, use the air hose branching joint provided (" Y " Type) provided with the CONTROLLER. Insert the branching joint into the Air Out quick disconnect on the CONTROLLER.**

Table. 2

Total Hose Length (m)* Note 1, 2		3.5	5.5	7.5
One E3000i Motor Spindle is connected to the Control Unit.	Air Pressure (MPa)	0.25	0.30	0.35
Two E3000i Motor Spindles are connected to the Control Unit.		0.30	0.35	0.40

*Note 1: "Hose Length" indicates total hose length consisting of the Quick Disconnect Hose and the Motor Cord Hose. See Fig.17 to see how to calculate "Hose Length".

*Note 2: When connecting a device other than the E3000i Motor Spindle to the E3000i Controller, refer to the "Air Pressure Settings" described in the E3000i Controller Operation Manual.

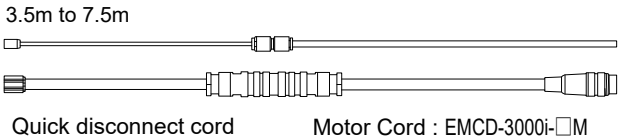

Fig. 17

ENGLISH

11. INSTALLING THE HIGH-PRESSURE PUMP, COOLANT HOSE AND FITTINGS

⚠ WARNING

- **When using coolant, check the operating pressure before connecting the coolant hose and fittings. If the maximum operating pressure of the coolant hose or fittings is exceeded, they could burst and cause injury.**
- **Connect the coolant hose and fittings securely. A coolant leak could cause injury or damage the device.**
- **When using an oil-based coolant, the coolant may be dispersed as a fine mist that could ignite. Implement fire prevention measures such as the use of dust collectors and automatic fire extinguishers.**

⚠ CAUTION

- **A high-pressure pump, filter and high-pressure coolant hoses are required in order to use this spindle. The user needs to prepare these items separately by themselves before use. Install a relief valve or a safety valve as a safety measure.**
- **Install the manifold block in the machine tool, and connect the manifold block to this spindle using a high-pressure coolant hose. Allow some extra length in the hose to prevent the hose and fittings from being damaged if the machine tool table is moved.**
- **The high-pressure pump, filter and high-pressure coolant hose product numbers are examples of those that Nakanishi used. Select and prepare the items with the specifications that you require. Read each Operation Manual for the high-pressure pump, filter and high-pressure coolant hose that you use.**

< Reference example of recommended items to prepare >

Item	Product Number (Example)	Manufacturer
High-pressure pump	Hydro pump ・CHP150-1200	RIX CORPORATION
Intake filter, intake hose	(CHP150-1200 accessory)	RIX CORPORATION
Filter	Line filter ・TM-C-04-2-3CH	Taisei Kogyo Co., Ltd.
High-pressure coolant hose	NH hose ・NH3-K6-□-K6 (□: length, unit: m)	ASK Corporation
High-pressure coolant fitting	Swagelok Tube fitting ・SS-6M0-2-2PR (included with this spindle)	Swagelok Company
Coolant hose Hose fitting	NH hose ・NH4-K6-□-K6 (□: length, unit: m)	ASK Corporation
	Levex series hose ・NWP3506	The Yokohama Rubber Co., Ltd.
Manifold block	Block manifold ・BMZSR1-Q2-G2	MISUMI Group Inc.
Relief valve	Pressure relief valve ・SS-4R3A5-RT Spring kit ・177-R3A-K1-F	Swagelok Company

* Prepare appropriate fittings for connections.
* When using the "CHP150-1200" hydro pump, the maximum pressure varies depending on the viscosity of the coolant.

  Maximum coolant pressure (approximate)
  - Water soluble : 10 MPa
  - Oil soluble : 20 MPa

11 - 1 Installing and Connecting the High-pressure Pump

(1) Install the manifold block so that it does not interfere with other components in the machine tool.
(2) Install the high-pressure pump, and place the intake filter in the coolant tank of the machine tool.
(3) Install the filter (filtration accuracy of 5 μm or less) and connect it to the high-pressure pump, the relief valve, and the manifold block with the coolant hose and fittings.
(4) Connect the relief valve to the high-pressure pump or high-pressure pump flow path, and connect the coolant hose to the discharge side of the relief valve. The coolant hose should be installed so that the coolant can be discharged into the coolant tank.

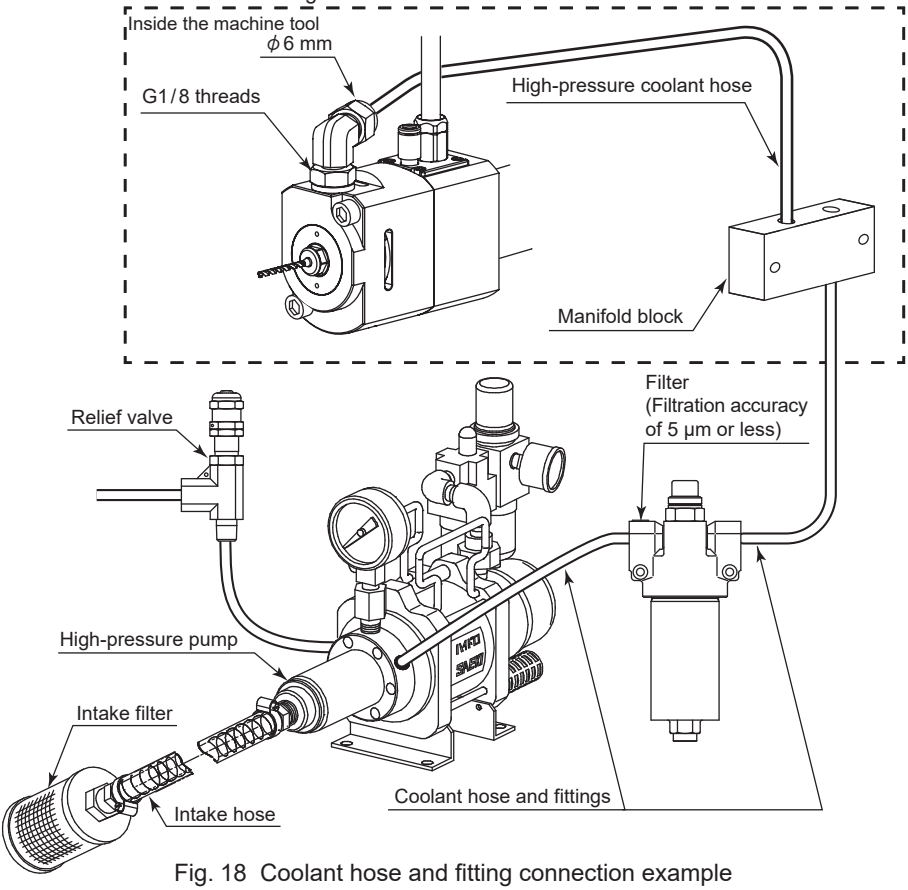

Fig. 18 Coolant hose and fitting connection example

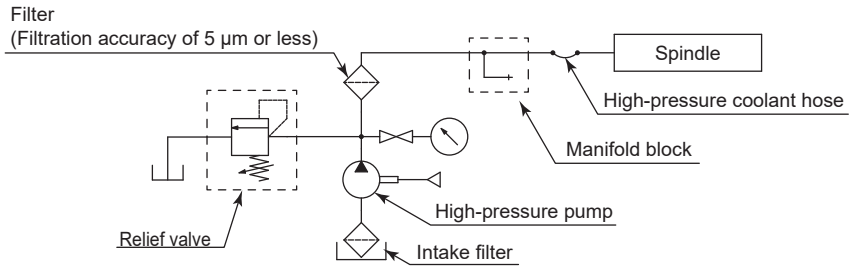

Fig. 19 Reference circuit diagram

11 - 2 Adjusting the High-pressure Coolant Fitting Angle

(1) Loosen the lock nut of the high-pressure coolant fitting.
(2) Adjust the high-pressure coolant fitting to an angle at which the high-pressure coolant hose is easy to connect.
(3) Tighten the lock nut to secure the high-pressure coolant fitting.
『Reference tightening torque：8N・m』

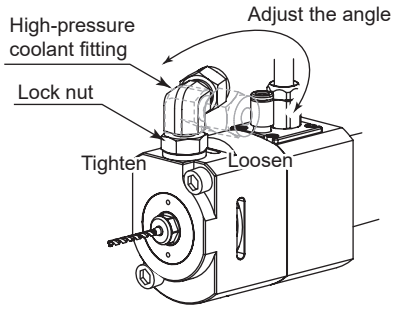

Fig. 20

11 - 3 Connecting the High-pressure Coolant Hose

(1) Insert the high-pressure coolant hose (diameter ϕ6 mm) fully into the coolant supply port (diameter ϕ6 mm), and turn the joint nut clockwise to tighten it. (Fig. 21)

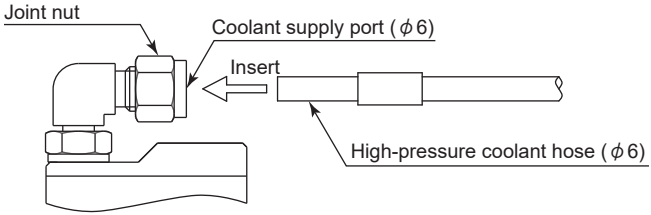

Fig. 21

(2) Fit an adjustable wrench on the elbow surface (shaded area) of the high-pressure coolant fitting to hold it in place, and use another adjustable wrench to tighten the joint nut 1 - 1 / 4 turns. (Fig. 22)

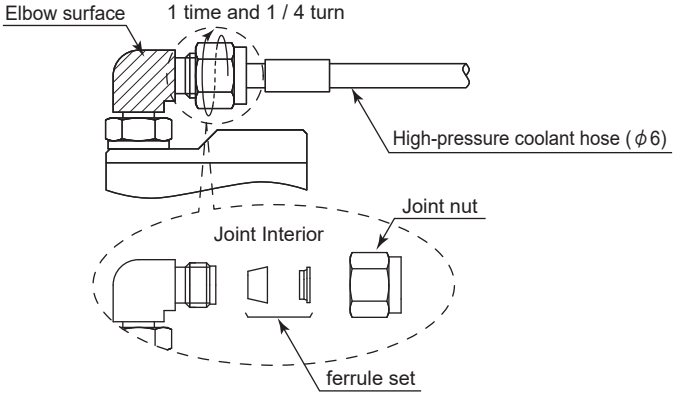

Fig. 22

ENGLISH

< Replacing the high-pressure coolant fitting >

(1) Loosen the lock nut of the high-pressure coolant fitting.

(2) Fit an adjustable wrench on the elbow surface (shaded area) of the high-pressure coolant fitting, and turn it counterclockwise to remove the high-pressure coolant fitting.

(3) Install the new high-pressure coolant hose and fitting to the G1 / 8 threads on the spindle.

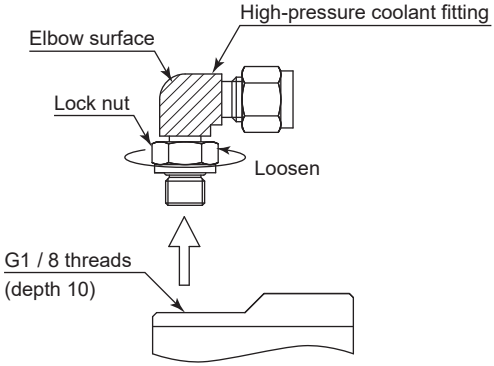

Fig. 23

11 - 4 Disconnecting and Reconnecting the High-pressure Coolant Hose

11 - 4 - 1 Disconnecting the Hose

(1) Before loosening the joint nut, put a mark on the high-pressure coolant hose (diameter ϕ6 mm) at the end of the joint nut.

(2) Draw a straight line on the flat part of the joint nut and the elbow surface of the high-pressure coolant fitting. (This line will be used later to check the position of the joint nut when it is retightened.)

(3) Loosen the joint nut and disconnect the high-pressure coolant hose (diameter ϕ6 mm).
(The ferrule set is fastened to the high-pressure coolant hose.)

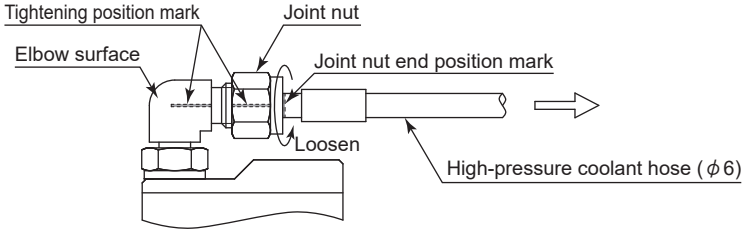

Fig. 24

11 - 4 - 2 Reconnecting the Hose

(1) Insert the high-pressure coolant hose (diameter ϕ6mm) so that the tapered surface of the ferrule set fastened to the high-pressure coolant hose (diameter ϕ6 mm) fits tightly against the tapered surface of the high-pressure coolant fitting. (Fig. 25)

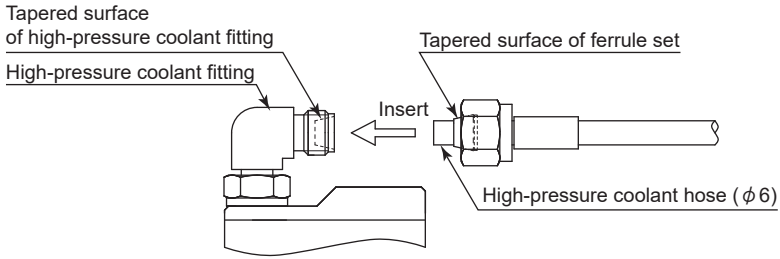

Fig. 25

(2) Fit an adjustable wrench on the elbow surface (shaded area) of the high-pressure coolant fitting to hold it in place, and use another adjustable wrench to tighten the joint nut to its original tightening position. (Check that the matching lines are aligned and the end of the joint nut is aligned with the mark on the hose). (Fig. 26)

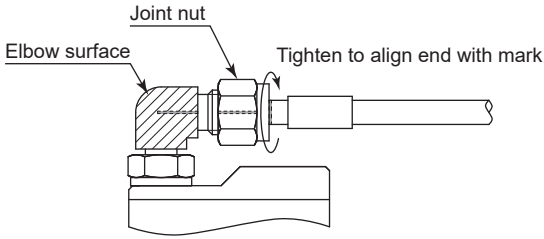

Fig. 26

(3) Tighten the joint nut slightly more than before (by an amount equivalent to the thickness of the line). (Fig. 27)

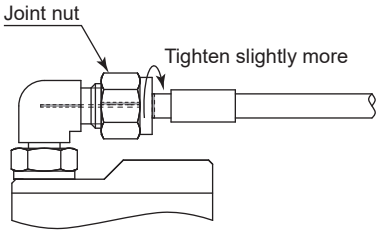

Fig. 27

ENGLISH

12. SUPPLYING THE COOLANT

⚠ CAUTION

- **Coolant is required when using this spindle. If this spindle is used without any coolant, the generated heat could damage the components.**
- **Use coolant with an ISO viscosity grade of VG 22 or lower. The lower the viscosity, the easier it is for the coolant to be released.**
- **Supply cooling air from the motor before supplying the coolant. If the coolant is supplied before supplying the coolant air, the air purge will be lost and the coolant may enter the spindle and cause damage.**
- **Make sure that coolant passes through a filter with a filtration accuracy of 5 μm or less before it is supplied to the spindle.**

12 - 1 Operation Procedure

Supply cooling air	Supply clean cooling air adjusted to 0.25 - 0.35 MPa from the motor. * When using the spindle for continuous operation, adjust the air pressure to 0.35 MPa.
↓	
Coolant supply start	Coolant liquid is adjusted to 3.0 - 20.0 MPa. * When using the "CHP150-1200" hydro pump, the maximum pressure varies depending on the viscosity of the coolant. Maximum coolant pressure (approximate) • Water soluble : 10 MPa • Oil soluble : 20 MPa
↓	
Rotation start-up	Start the motor gradually.

12 - 2 Stop Procedure

Rotation stop	Stop the motor.
↓	
Coolant supply stop	Stop the supply of coolant. * When stopping the cooling air supply, be sure to turn it off after more than five minutes have passed after the coolant supply has stopped.

13. INSTALLING THE MOTOR SPINDLE

⚠ WARNING

When installing the spindle, make sure that the fixed base is grounded to the machine tool in order to avoid the risk of an electric shock.

⚠ CAUTION

- **Do not damage or apply any impact to the spindle when installing it. Doing so may cause the components to malfunction.**
- **Never fasten a sleeve directly onto the spindle body housing (diameter ϕ31 mm) section when installing the spindle.**

Install the spindle by using the mounting holes on the body, and do not fasten a sleeve onto the body housing section. This is designed to eliminate deformation/damage of the spindle when performing the installation.

< Using the mounting holes (front) >

(1) Insert the spindle body housing (diameter ϕ31 mm) section into the fixed base of the machine tool.
(2) Secure the spindle through the mounting holes (2 locations) using the fastening bolts (M5). (Fig. 28)

< Using the mounting holes (rear) >

(1) Insert the spindle body housing (diameter ϕ31 mm) section into the fixed base of the machine tool.
(2) Secure the spindle through the mounting holes (2 locations) using the fastening bolts (M6). (Fig. 29)

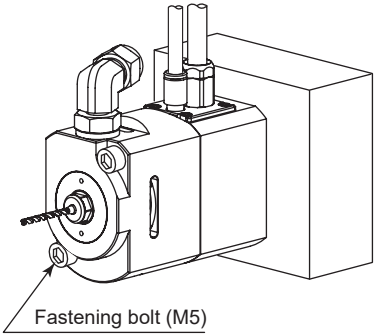

Fig. 28

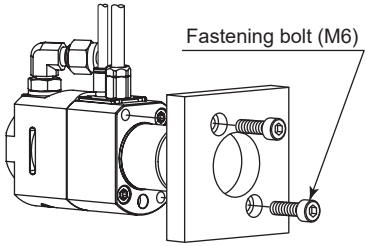

Fig. 29

14. BREAK-IN PROCEDURE

During transportation, storage or installation, the grease inside the bearings will settle. If the spindle is suddenly run at high-speed, excessive heat may cause bearing damage. Before operating for the first time after installation, repair, or a long period of non-operation, follow the break-in procedure detailed in steps 1 to 4 of Table. 3.

Table. 3

Step	1	2	3	4
Rotation Speed (min^{-1})	5,000	10,000	20,000	30,000
Rotation Time (min)	15	10	10	10
Items to Check	Coolant is supplied at pressure of approx. 3 MPa			

15. CAUTIONS WHEN USING CUTTING DRILLS

⚠ CAUTION

- **Refer to the following formula for the maximum spindle rotation speed when using a drill or an end mill.**

$$\text{Rotation speed } (min^{-1}) = \frac{1{,}000 \times \text{Cutting speed (m/min)}}{3.14 \times \text{Cutting drill diameter (mm)}}$$

- **Keep the overhang length to a minimum when installing the cutting drill. If the overhang length is too long, the cutting drill may bend and cause injury.**
- **When a long drill is used, increase rotation speed gradually to prevent damage.**
- **The longer the drill length, the greater the chance of the tool to break and cause damage due to the runout. In order to avoid this, start the drilling after processing a center hole or guide hole. (Refer to<Example of deep-hole drilling>).**

ENGLISH

(1) The spindle RPM depends on the drill diameter and the workpiece material.
(2) Please follow the manufacturer's recommended feeds and speeds.
Using drills outside of the manufacturer's maximum recommended rotational speed may cause damage to the spindle or injury to the operator.
(3) When increasing the cutting drill overhang, reduce the motor speed. (Table. 4)
(4) Always clean the drill shank before installing the drill in the spindle.
Foreign matter in the collet or collet nut may cause excessive run-out that could damage the cutting drill or spindle.
(5) Use after checking for runout.
(6) Do not strike, drop or disassemble the spindle.

Table. 4 Relationship Between Drill Overhang Length and RPM

Overhang Length (mm)	Max RPM
Drill diameter × 10	100 % of the RPM
Drill diameter × 20	60 % of the RPM
Drill diameter × 20 or more	30 % or less of the RPM

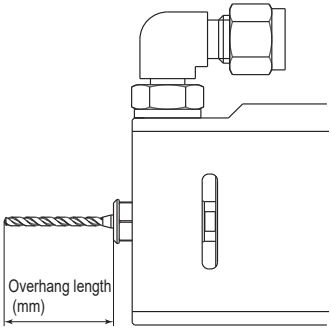

Fig. 30

＜Example of deep-hole drilling＞
(1) Drill guide hole (same diameter drill)

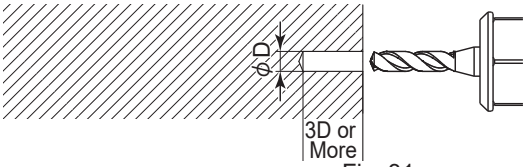

Fig. 31

(2) Insert into the guide hole at low rpm

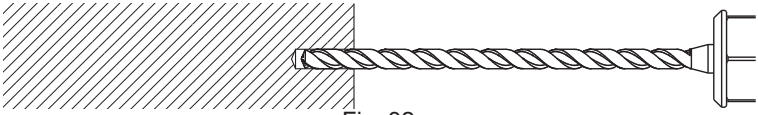
Fig. 32

(3) Deep-hole drilling at cutting speed

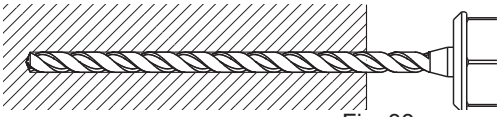
Fig. 33

*Use under conditions and handling recommended by the tool manufacturer.

16. TROUBLESHOOTING

In the event of any problems or concerns, please check the following before contacting your dealer.

Trouble	Cause	Inspection / Corrective Action
Spindle does not run.	The ball bearings are damaged.	Replace the ball bearings. (Return to NAKANISHI dealer for service.)
	Motor is broken.	Replace the motor. (Return to NAKANISHI dealer for service.)
	Collet nut contact or seizure occurred.	Replace the collet nut. Or, replace the spindle. (Return to NAKANISHI dealer for service.)
Overheating during rotation.	Cutting debris has contaminated the ball bearings, and the ball bearings are damaged.	Replace the ball bearings. (Return to NAKANISHI dealer for service.)
Abnormal vibration or noise during rotation.	Using bent drill.	Replace the cutting drill.
	Cutting debris has contaminated the ball bearings.	Replace the ball bearings. (Return to NAKANISHI dealer for service.)
	The ball bearings are worn.	
Drill slippage.	Collet or collet nut is not correctly installed.	Check and clean the collet and collet nut, then properly retighten the collet.
	The collet and collet nut are worn.	Replace the collet and collet nut.
Excessive drill run-out.	The cutting drill is bent.	Replace the cutting drill.
	Collet nut is not correctly installed.	Secure the collet and collet nut correctly.
	The collet and collet nut are worn.	Replace the collet and collet nut.
	Inside of the spindle is worn.	Replace the spindle shaft. (Return to NAKANISHI dealer for service.)
	Debris inside the collet, collet nut or spindle.	Clean the collet, collet nut and the inside of the spindle.
	The ball bearings are worn.	Replace the ball bearings. (Return to NAKANISHI dealer for service.)
Coolant is not discharged from the end of the cutting drill.	The cutting drill is damaged or clogged.	Replace the cutting drill.
	Insufficient coolant pressure.	Check and adjust the coolant pressure.
	High-pressure pump failed.	Contact the manufacturer for repair.
	Coolant filter is clogged.	Clean or replace the filter.

E3000i CONTROLLER Operation Manual.

17. DISPOSAL OF THE SPINDLE

When disposal of this spindle is necessary, follow the instructions from your local government agency for proper disposal of industrial components.

株式会社ナカニシ nakanishi-spindle.com
〒322-8666 栃木県鹿沼市下日向700
TEL: 0289-64-3380 FAX: 0289-62-5636

NAKANISHI INC. en.nakanishi-spindle.com
700 Shimohinata, Kanuma, Tochigi 322-8666, Japan

NSK America Corp. www.nskamericacorp.com
1800 Global Parkway, Hoffman Estates, IL 60192, USA

NSK Europe GmbH EC REP
Elly-Beinhorn-Str. 8, 65760 Eschborn, Germany

NSK United Kingdom Ltd. UK Responsible Person
Hertford House, Rutherford Close, Stevenage, Hertfordshire, SG1 2EF, UK

取扱説明書のダウンロード Download operation manual

ウェブサイト Our website

本書の内容は、改善のため予告なしに変更することがあります。
Contents are subject to change without notice.

2025-04-15 CACFXXXX XXX