NAKANISHI

高速ジグ研削用エアータービンスピンドル / High-Speed JIG Grinding Air Turbine Spindle

PLANET600

取扱説明書 / OPERATION MANUAL

日本語 : P1 - P15 / English : P17 - P32

OM-K0679

Thank you for purchasing the High-Speed JIG Grinding Air Turbine Spindle " PLANET 600 ". This Air Turbine Spindle is designed for I.D. grinding and can be installed on milling machines, jig boring machines or special purpose machines. The Air Line Kit (with Lubricator) and a compressor are required to drive this Air Turbine Spindle. Read this and all the associated component Operation Manuals carefully before use. Always keep this Operation Manual in a place where a user can referred to for reference at any time.

CONTENTS

1. CAUTIONS FOR HANDLING AND OPERATION

■ Read these warnings and cautions carefully and only use in the manner intended.

■ These warnings and cautions are intended to avoid potential hazards that could result in personal injury to the operator or damage to the device. These are classified as follows in accordance with the seriousness of the risk.

Class	Degree of Risk
⚠ DANGER	Existence of a hazard that could result in personal death or serious injury, if the safety precautions are not followed.
⚠ WARNING	A safety hazard could result in bodily injury or damage to the device if the safety instructions are not properly followed.
⚠ CAUTION	A hazard that could result in light or moderate bodily injury or damage to the device if the safety instructions are not followed.

ENGLISH

⚠ DANGER

① Always install the Anti-Rotation Bar to the Air Turbine Spindle when installing this spindle into the main spindle of the milling machine or jig boring machine. If the Anti-Rotation Bar is not mounted to the Air Turbine Spindle, the supply air / oil hose will become twisted and tangled, causing serious bodily harm and damage.

② Installation and operation the Air Turbine Spindle should be performed by a person with experience with milling machines, jig boring machines, or special purpose machines as well as the installation and plumbing of compressed air.

⚠ WARNING

① The Air Turbine Spindle is not a hand tool. It is designed to be used on milling machines, jig boring machines or special purpose machines.

② Do not touch the grindstone while it is rotating. It is very dangerous.

③ Wear safety glasses, dust mask, and use a protective cover around the Air Turbine Spindle whenever the Air Turbine Spindle is rotating.

④ Never handle or operate the Air Turbine Spindle until you have thoroughly read the Operation Manuals and safe operating conditions have been confirmed.

1) To prevent injuries / damages, check the Air Turbine Spindle and grindstone for proper installation, before operating the Air Turbine Spindle.

2) Before disconnecting the Air Turbine Spindle, always turn the control power off and turn off the compressed air supply to the Air Line Kit. It is then safe to remove the Air Turbine Spindle from the machine.

⑤ When installing a grindstone, tighten the collet correctly, then re-check the collet and collet nut before starting rotation. Do not over-tighten the collet. This may cause damage to the spindle.

⑥ Do not use bent, broken, chipped, out of round or sub-standard grindstones or shanks, as this may cause them to vibrate, shatter or explode. Grindstones with fractures or a bent shank will cause injury to the operator. When using a new grindstone, rotate it at a low speed and increase speed gradually for safe operation.

⑦ Do not exceed the recommended maximum allowable speed of the grindstone. For your safety, use speeds below the grindstone manufacturers maximum allowable speed.

⑧ Do not apply excessive force. This may cause injury to the operator by slippage of the shank or damage to the grindstone, causing a loss of concentricity and precision to the Air Turbine Spindle.

⚠ CAUTION

① Do not drop or hit this Air Turbine Spindle, as shock can damage to the internal components.

② Before use, carefully read " Air Line Kit Operation Manual " regarding the correct connection, operation and cautions when using the Air Line Kit.

③ Be sure to clean the collet, collet nut and the inside of the spindle before installing a grindstone. If ground particles or metal chips stick to the inside of spindle or the collet, damage to the collet or spindle can occur due to the loss of precision.

⚠ CAUTION

④ When cleaning the Air Turbine Spindle, stop the Air Turbine Spindle and remove debris with a soft brush or a cloth. Do not blow air into the end of spindle area (refer to section " 6 - 2 Outside View ") with compressed air as foreign particles or grinding debris may get into the ball bearing.

⑤ Always clean the shank of the grindstone before installing the grindstone into the spindle.

⑥ When choosing the correct collet size to fit the shank of the grindstone, the collet size tolerance of − 0 ～ +0.1mm maximum is strongly recommended. If the shank diameter is any amount larger than the collet diameter, or, more than .1mm smaller than the collet diameter, clamping will be improper and accuracy will be compromised.

⑦ Operating the Air Turbine Spindle with insufficient Oil Lubrication will cause low rotational speed, damage to the internal components and shorter life of the Air Turbine Spindle.

⑧ Be sure to drain moisture and condensation from the Air Line Kit (air filter bowl) regularly to avoid moisture being carried to the Air Turbine Spindle. This may cause damage to the Planet Air Turbine Spindle.

⑨ Check to make sure the Air Turbine Spindle Shank is properly and securely mounted in the machine prior to use. If the Air Turbine Spindle is not properly aligned or there is excessive play, do not use the Air Turbine Spindle until this situation is corrected.

⑩ Select suitable products or grindstones for all applications. Do not exceed the capabilities of the Air Turbine Spindle or the grindstone.

⑪ Do not stop the Air Turbine Spindle while coolant spray is being applied to the grindstone. Removing the air pressure from the Air Turbine Spindle causes a loss of purging, allowing the Air Turbine Spindle to ingest coolant and debris. This will cause damage to the Air Turbine Spindle.

⑫ Carefully direct coolant spray directly on the grindstone. Do not spray directly on the Air Turbine Spindle body or the collet nut. Large amounts of coolant sprayed directly on the Spindle end of the Air Turbine Spindle may cause excess load of the Spindle, causing a loss of durability and longevity of the Air Turbine Spindle.

⑬ Stop the Air Turbine Spindle immediately when extreme rotation fluctuations or unusual vibration is observed. Immediately, check the content of section " 16. TROUBLESHOOTING ".

⑭ Always check if the grindstone, collet, collet nut, connection hose and supply / oil hose for damaged before and after operating.

⑮ If the collet or collet nut show signs of wear or damage, replace them before a malfunction or additional damage occurs.

⑯ After installation, repair, initial operation, or long periods of non operation, please refer to section " 10. BREAK-IN PROCEDURE ". When checking the Air Turbine Spindle, no vibration or unusual sound should be observed during rotation.

⑰ Do not disassemble, modify or attempt to repair the Air Turbine Spindle. Additional damage will occur to the internal components. Service must be performed by NSK NAKANISHI or an authorized service center.

⑱ When using this Air Turbine Spindle for mass production, please consider the purchase of an additional Air Turbine Spindle to be used as a back-up in case of emergency.

⚠ CAUTION

⑲ **Securely connect the compressor supply connection hose to the Air Line Kit, and, connect the supply / oil hose to the Air Line Kit and the Air Turbine Spindle to avoid accidental disconnection during use.**

2. BASIC PACKAGE

When opening the package, check if it includes all items listed in " Table. 1 Packing List Contents ". In the event of any shortage, please contact either NAKANISHI (see the " 4. CONTACT US " section) or your local dealer.

Table. 1 Packing List Contents

Air Turbine Spindle・・1pc.*1 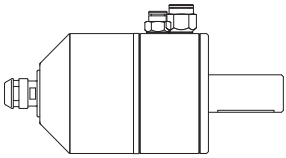	Collet Nut (K - 265)・・1pc.*2 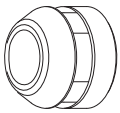
Wrench (12 x 14)・・2pcs. 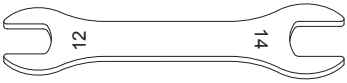	Supply Air / Oil Hose (K - 254：2m) (with Filter Joint (FJ - 01))・・1pc. 
Silencer・・1pc. 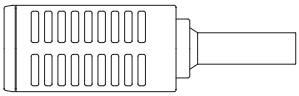	Anti-Rotation Bar・・1set 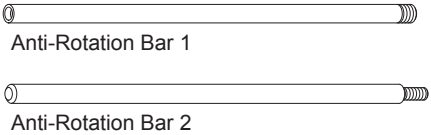
Inspection Card・・1pc. 	Operation Manual・・1set 

*1 Collet is sold separately. Please select the suitable collet size for your application.

*2 The collet nut is attached to the Air Turbine Spindle.

If the silencer is clogged or extremely dirty, the silencer is replaceable by the end-user (Refer to Table. 2).

Table. 2

Name	Model	Manufacturer
Silencer	ANB1 - C08	SMC

3. WARRANTY

We provide a limited warranty for our products. We will repair or replace the products if the cause of failure is due to the following manufactures defects. Please contact us or your local distributor for details.

(1) Defect in manufacturing.
(2) Any shortage of components in the package.
(3) Where damaged components are found when initially opening the package.
(This shall not apply if the damage was caused by the negligence of a customer.)

4. CONTACT US

For your safety and convenience when purchasing our products, we welcome your questions.
If you have any questions about operation, maintenance and repair of the product, please contact us.

Contact Us

● For U.S. Market

Company Name : **NSK America Corp**
Industrial Div.
Business Hours : 8:30am to 17:00pm (CST)
(closed Saturday, Sunday and Public Holidays)
U.S. Toll Free No. : 800-585-4675
Telephone No. : 847-843-7664
Fax No. : 847-843-7622
Web Address : www.nskamericacorp.com

● For Other Markets

Company Name : **NAKANISHI INC.**
Business Hours : 8:00am to 17:00pm
(closed Saturday, Sunday and Public Holidays)
Telephone No. : +81 (0) 289-64-3520
e-mail Address : webmaster-ie@nsk-nakanishi.co.jp

5. FEATURES

① Air consumption is 175Nℓ / min (6.18 CFM) and can be used with air compressor of 3HP (2.2 kW).
② This Air Turbine Spindle is designed to be used with adjustable boring heads.
③ This Air Turbine Spindle is designed for inside surface grinding (I.D. Grinding) and can be installed on milling machines, jig boring machines or special purpose machines.
④ Various sizes of collets are available 0.5mm - 6.35mm (Refer to the " 6 - 1 Specifications <Option>").

6. SPECIFICATIONS AND DIMENSIONS

6 - 1 Specifications

Model	PL600 - M2040	PL600 - H3440
Rotation Speed	65,000min^{-1} (rpm) ±10% (55,000 - 72,000min^{-1} (rpm))	
Appropriate Air Pressure	0.4MPa (58psi) (0.3 - 0.5MPa (43.5 - 72.5psi))	
Air Consumption	175Nℓ / min (130 - 210Nℓ / min)	
Shank Type	ϕ20 Straight	ϕ19.05 Straight
Weight	1,740g	1,735g
Noise Level at 1m distance	Less than 80dB (A)	

	Temperature	Humidity	Atmospheric Pressure
Operation Environment	0 - 40°C	MAX.75% (No condensation)	800 - 1,060hPa
Transportation and Storage Environment	-10 - 50°C	10 - 85%	500 - 1,060hPa

<Option>

Collet (CHK- □□)	ϕ0.5 - ϕ6.0mm in 0.1mm increments and ϕ2.35mm, ϕ3.175mm, ϕ4.76mm, ϕ6.35mm
Collet Nut	K - 265

6 - 2 Outside View

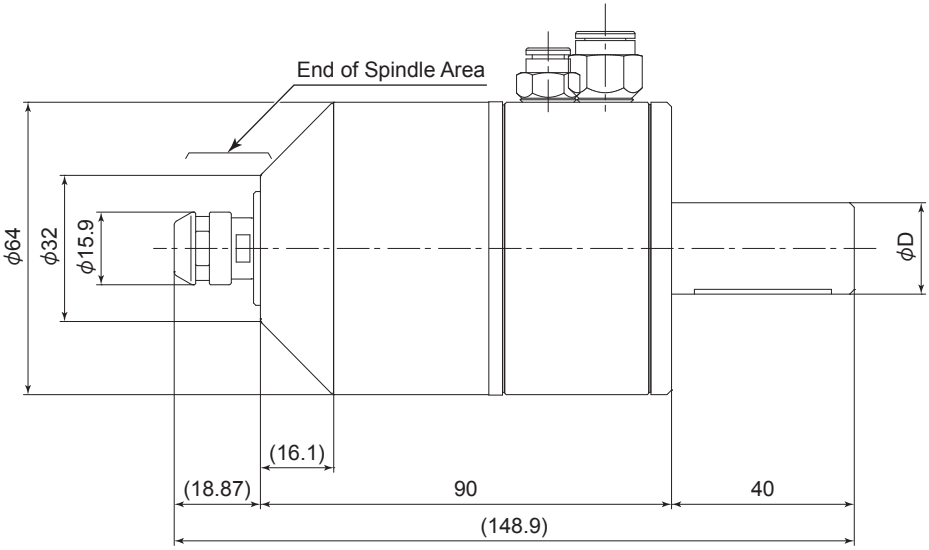

Model	PL600 - M2040	PL600 - H3440
ϕD	ϕ20	ϕ19.05

Fig. 1

7. REPLACING THE GRINDSTONE

⚠ CAUTION

Do not tighten the collet without inserting the test bur or the tool shank into the collet, as this will damage the collet, spindle or collet nut, causing difficulty removing the collet.

RECOMMENDATION

Please set the grindstone to minimize the overhang amount. 13mm is the maximum amount of overhang to maintain high accuracy and safety.

① Set the provided 12mm wrench on the spindle shaft.
② Place the provided 14mm wrench on the collet nut and turn it counterclockwise to loosen the collet and remove the grindstone (The first turn will loosen the collet nut, but the grindstone will not release and turning will become stiff. Keep turning through the stiffness and the collet will open).
③ Clean the collet, collet nut and spindle taper, then insert the new grindstone and tighten the collet by turning clockwise. Do not over-tighten.

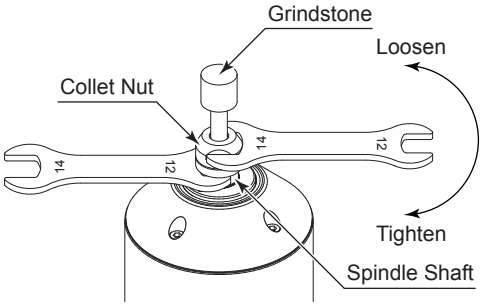

Fig. 2

ENGLISH

8. REPLACING THE COLLET

⚠ CAUTION

When installing the collet into the collet nut, be sure to fully engage the latch inside the collet nut to the groove on the collets outer diameter area. It is very important to note that if the collet is attached without being engaged with the latch of the collet nut, the collet will stick inside the spindle taper, and this may cause damage to the collet and or the spindle.

① Remove the grindstone according to the section " 7. REPLACING THE GRINDSTONE " procedure above and remove collet nut assembly (Fig. 3).

② The collet and collet nut are secured by a groove in the collet and a flange in the collet nut. To remove the collet hold the collet nut in one hand and push diagonally down on the collet. The collet should be released (Fig. 4).

③ To install the collet, hold the collet at a slight angle, and insert it into the collet nut (Fig. 5).
Press the collet in the collet nut by positioning the collet in the collet nut and pressing down on flat surface (Fig. 4).
Be sure to fully engage the latch inside the collet nut into the groove on the collet's outer circumference area (Fig. 6).

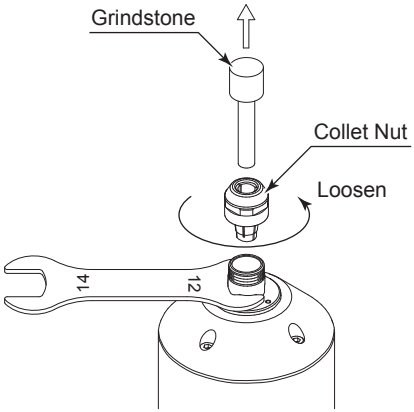

Fig. 3

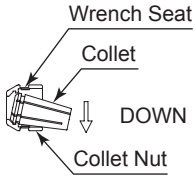

Fig. 4

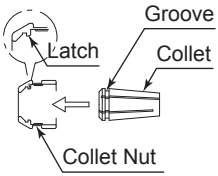

Fig. 5

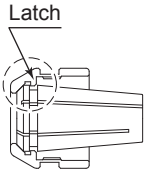

Fig. 6

9. CONNECTION TO THE AIR LINE KIT

⚠ CAUTION

Make sure to turn the compressed air supply to the Air Line Kit OFF, before replacing the Lubricating Oil or draining the water in Lubricating Oil.

① Connect the air hose to the φ6 One - Touch Joint on the Air Line Kit.
② Connect the silencer to the φ8 One - Touch Joint of the Air Turbine Spindle.
③ Connect the Filter Joint of the supply air / oil hose to the Secondary Joint (φ6 One - Touch Joint) of the Air Line Kit (Fig. 7 ①).
④ Fill Oil Reservoir through the Oil Filler Cap with recommended NAKANISHI Lubricating Oil (K - 211 : Air Line Kit's Standard Accessories) to Upper Limit. Disconnect from air supply prior to opening Oil Filler Cap. Do not over or under fill.
⑤ Connect the connection hose (Air Line Kit's Standard Accessories) to the Primary Joint of the Air Line Kit and Compressor (Fig. 7 ②).
⑥ Supply air from the air compressor and turn the Regulator Knob to set air pressure between 0.3 - 0.5 MPa (43.5 - 72.5psi).
⑦ Turn the ON / OFF Valve to ON and rotate the Air Turbine Spindle according to the recommended proper air pressure.
Adjust the Oil Drip Rate of the AL - M1202 to the recommended volume which is 1drop / min. (Commercially Air Line Kit has the same Oil Drip Rate).
* Refer to the Operation Manual of the Air Line Kit for detailed information.
⑧ Be sure to adjusted to proper Oil Drip Rate before using the Air Turbine Spindle.
⑨ Variations in rotational speed may occur due to the instability of the oil amount at the beginning of use. When initially starting the Air Turbine Spindle, the rotational speed of the Air Turbine Spindle may fluctuate. The rotation must be stable before using.
If the Oil Bowl of the Lubricator is overfilled, fluctuation in rotation will occur. Incorrect Oil Type will also cause rotation fluctuations.

Lubricating Oil
Use ISO VG15 Liquid Paraffin (Shell Ondina Oil #15) in the Air Line Kit lubricator bowl (For U.S.A. specification, use Chevron Superla #9).

Model
• Lubricating Oil (K - 211) 70cc
• Lubricating Oil (K - 202) 1 ℓ

⚠ CAUTIONS IN USING AIR LINE KIT

- **When connecting the Compressor and Air Line Kit, it is recommended install an Air Filter and Air Dryer to between Compressor and Air Line Kit in order to supply clean dry air to the Air Turbine Spindle. Using compressed air containing excessive moisture could result in malfunction or failure of the Air Turbine Spindle. If excessive moisture or condensation are found in Air Filter Bowl, it will be necessary to install an Air Dryer and larger air filter on the Primary Joint side of the Air Line Kit to prevent and remove excessive moisture.**
- **Connect the input air supply connection hose and supply air / oil hose securely to avoid accidental disconnection during use. Input air pressure should never exceed 1.0MPa (145psi). Air pressure exceeding 1.0MPa (145psi) may cause the supply connection hose and or air / oil hose supply to rupture.**

⚠ CAUTIONS IN USING AIR LINE KIT

- **Make sure operation air pressure is less than 1.0MPa (145psi) before connecting the input supply connection hose and air / oil supply hose. If operation air pressure is exceeds 1.0MPa (145psi), injury to the operator may occur by accidental disconnection before or during use.**
- **Before use, carefully read " Air Line Kit Operation Manuals " regarding the correct connection, operation and cautions when using the Air Line Kit.**

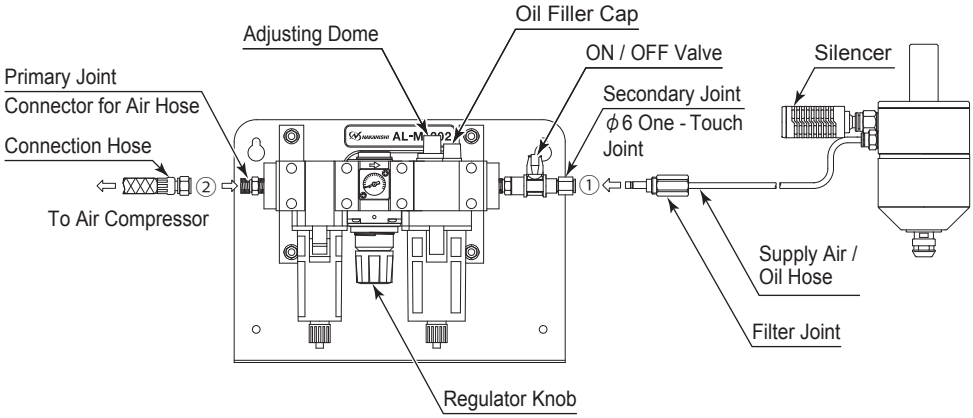

Fig. 7 Connection of Air Line Kit " AL - M1202 (Sold Separately) "

10. BREAK-IN PROCEDURE

During transportation, storage or installation, the oil inside the bearings may settle. If the Air Turbine Spindle is suddenly run at high-pressure, the bearings may not have sufficient lubrication, causing excessive heat that will cause bearing damage.
After installation, repair, initial operation, or long periods of non operation, please carry out break-in as follow. Slowly supply the air pressure to the Air Turbine Spindle over a period of 10 minutes, increasing the supply air pressure until working pressure is reached.

11. CAUTIONS WHEN USING GRINDSTONES

⚠ CAUTION

The maximum surface speed or rpm is always specified for a grindstone. Do not exceed the maximum speed with reference to the calculating chart below. Always follow the grindstone manufacturer's recommendations.

$$\text{Surface Speed (m / s)} = \frac{3.14 \times \text{Diameter (mm)} \times \text{Rotation Speed (min}^{-1}\text{) (rpm)}}{1{,}000 \times 60}$$

① The proper surface speed for general grindstones is 10 - 30m / s.
② Do not exceed 13mm of overhang for mounted grindstones as shown in Fig. 8. If the overhang must exceed 13mm, reduce the Air Turbine Spindle rotation speed in accordance with Table. 3.
③ Dress the grindstone prior to use.
④ Do not use grindstones with bent or broken shanks, cracks or excessive run-out.
⑤ For grinding, the maximum depth of cut should not exceed 0.005mm radially or axially. Reciprocate the grindstone several times after each pass to eliminate grindstones tool pressure.
⑥ Keep the shank of the grindstone, collet and collet nut clean. If contaminants are left in the collet or collet nut, excessive run-out will cause damage to the grindstone and or Air Turbine Spindle.
⑦ Do not strike or disassemble the Air Turbine Spindle.
⑧ Always set the grindstone to minimize the amount of overhang. 13mm is the maximum amount of overhang to maintain high accuracy and safety.

Table. 3 Overhang and Speed

Overhang (mm)	Max. Speed (min^{-1}) (rpm)
20	N x 0.5
25	N x 0.3
50	N x 0.1

*N=Max. Operating Speed with 13mm overhang.

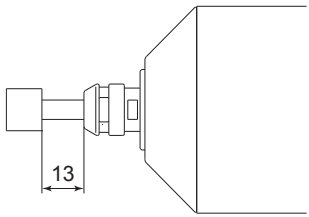

Fig. 8

ENGLISH

12. DRESSING GRINDSTONES (WA AND GC TYPE)

<When using Grindstone with a center hole (shankless), always dress the stone>

⚠ CAUTION

The grindstone's center-core is runout before dressing. Be sure to dressing the grindstone before grinding work.

① Mount the grindstone that will be used for Jig Grinding in the Air Turbine Spindle.
② Install the Air Turbine Spindle into the main spindle of the Milling Machine.
③ Rotate the Air Turbine Spindle to a rotation speed of approximately 30,000 - 40,000min^{-1} (rpm). Place dressing tool near the grindstone at an approximate angle of 8 - 18 degrees.
④ Gradually move the diamond dresser tool until it lightly comes in contact with the grindstone.
⑤ Dress the grindstone by moving the main spindle of the milling machine up and down.
⑥ Gradually move the diamond dresser tool toward the grindstone until outer circumference of the grindstone is completely uniform and free of vibration and run-out.

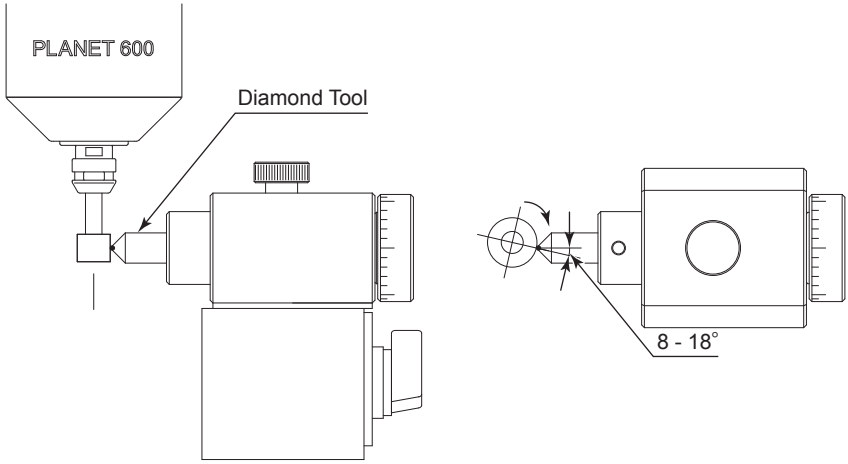

Fig. 9

13. USING THE ANTI-ROTATION BAR

Use the Anti-Rotation Bar (Included) and Block (Not Included) for your safety. Should the main spindle be accidentally rotated, the Anti-Rotation System will prevent tangling of the supply air / oil hose.

① Thread the Anti-Rotation Bar 1 (male thread) into the Anti-Rotation Bar 2 (female thread) (Fig. 10).
② Thread the Anti-Rotation Bar into the Outward Rotation Ring of the Air Turbine Spindle before use. Refer to Fig. 11.

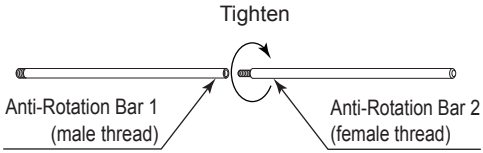

Fig. 10

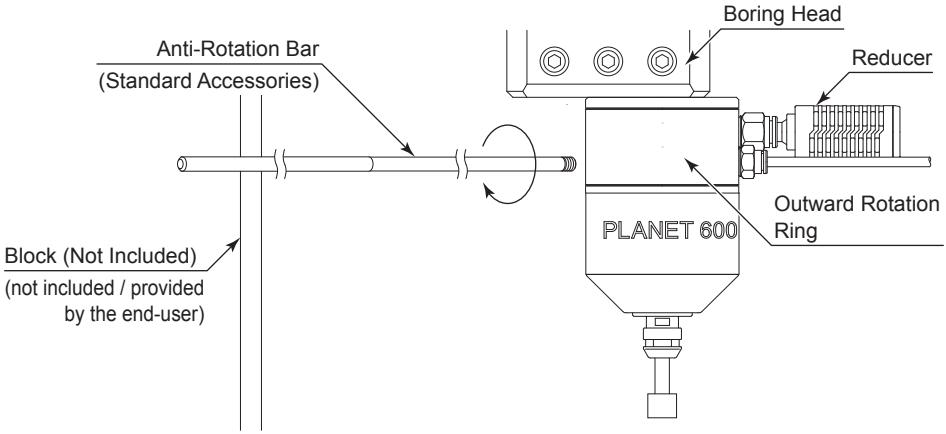

Fig. 11

14. JIG GRINDING METHOD IN A VERTICAL MILLING MACHINE

⚠ DANGER

- **Be sure to rotate the main spindle of the milling machine in less than 120min^{-1} (rpm). Rotating the main spindle in more than 120min^{-1} (rpm) may cause the Air Supply Hose to disconnect from the Air Turbine Spindle that can lead to tool breakage, a serious accident and severe injury.**
- **Be sure to mount the Anti-Rotation Bar to the Air Turbine Spindle when installing it on a vertical milling machine. If you do not attach the Anti-Rotation Bar to the Air Turbine Spindle, it may cause the supply air / oil hose to become tangled, causing a serious accident and or injury.**

⚠ WARNING

When installing the Air Turbine Spindle to a vertical milling machine, ensure that the vertical milling machine is grounded in order to avoid risk of an electric shock.

⚠ CAUTION

When installing the Air Turbine Spindle in the machine spindle, do not hit, drop or cause shock to it at any time. This may cause damage to internal components and result in malfunctions and loss of accuracy.

① Installing the work materials onto the holder.
② Align and indicate the center of the milling machines main spindle to the center of the hole on the work material.
③ Install the adjustable boring head into the main spindle of the vertical milling machine.
④ Install the Air Turbine Spindle into the adjustable boring head.
⑤ Thread the Anti-Rotation Bar into the Outward Rotation Ring of the Air Turbine Spindle before use. Refer to section " 13. USING THE ANTI-ROTATION BAR ".
⑥ Rotate the main spindle of the milling machine by hand. Place and mount the Block (provided by the end-user) in a position where the Anti-Rotation Bar will come in contact with the block completely.
⑦ Rotating the Air Turbine Spindle, adjust the eccentricity amount of the adjustable boring head until the grindstone lightly comes in contact with the work material to be ground.
⑧ Rotate the main spindle on the milling machine a maximum of 120 min^{-1} (rpm) and begin to grind the work piece.
⑨ Reciprocate the grindstone several times after each pass to eliminate grindstone tool pressure.
⑩ Stop the rotation of the main spindle on the milling machine.
Adjust the eccentricity amount of the adjustable boring head then repeat the procedure (Refer to " 11. CAUTIONS WHEN USING GRINDSTONES ").

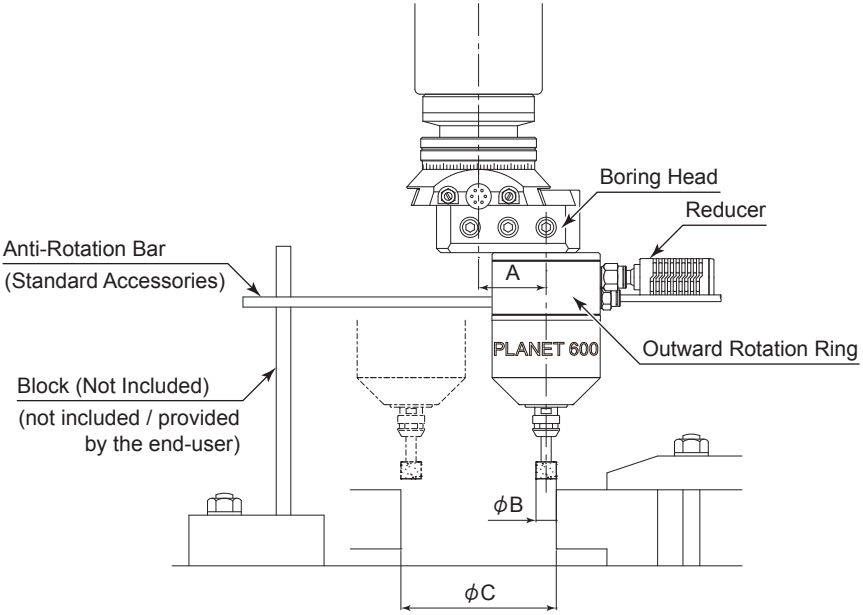

2A (Eccentricity amount) + B (Outside diameter of the grindstone axis) = C (Bore of Work)

Fig. 12

15. CONFIRMING THE PART BORE DIAMETERS, COLLET DIAMETER AND GRINDSTONE DIAMETER

⚠ CAUTION

Be sure to confirm the grindstone manufactures maximum rotation speed for that grindstone before rotating the spindle. If using the grindstone beyond the maximum rotational speed of the grindstone, damage to the grindstone, spindle or malfunction to the collet or spindle will occur.

When using a grindstone, select the correct collet diameter for the corresponding shank size and grindstone diameter according to diameter of the bore to be ground (Refer to Table. 4).

Table. 4

Work Hole Diameter	Collet Diameter	Recommended Grindstone Diameter
Less than ϕ13.0mm	ϕ3.0mm	Less than ϕ6.0mm
Less than ϕ70.0mm	ϕ6.0mm	Less than ϕ16.0mm

16. TROUBLESHOOTING

If a problem or concern occur, please check the following items prior to consulting your dealer.

Trouble	Cause	Inspection / Corrective Action
The Air Turbine Spindle does not rotate or rotate smoothly.	Air flow does not reach the Air Turbine Spindle.	Check if input supply connection hose or air / oil supply hose is broken, bent or disconnected.
		Check connection of the input supply connection and air / oil supply hoses.
		Check the compressor power supply and the air compressor output.
		Check the Regulator and set to the correct air pressure. Check all connections input supply and air / oil supply hose.
	The spindle ball bearings have been damaged.	Replace the ball bearings. (Return to NAKANISHI dealer service.)
Air Turbine Spindle rotation speed is too slow.	The connection hose or air / oil supply hose have been damaged.	Replace the input supply and or air / oil supply hoses.
	Poor connection of input supply or air / oil supply hose.	Check all threaded joints and re-tighten if necessary.
	Low air pressure.	Check the Compressor, Air Circuit, and Regulator.
	Low Lubricating Oil.	Check lubricator for proper lubricant level. Set the Oil Drip Rate 1 drops / min. if using the AL - M1202 Air Line Kit or commercially available Air Line Kit.
	Water, dirt and debris are collected in the Air Filter.	Drain water, dirt and debris from the Air Filter Bowl.

Trouble	Cause	Inspection / Corrective Action
Air Turbine Spindle rotation speed is too slow.	Water in Lubricating Oil reservoir.	Drain water from Lubricating Oil reservoir and replace with clean Lubricating Oil.
Air Turbine Spindle is Oscillating during rotation.	Lubricator inclined or upside down. 	Inclined or upside down lubricator will flood spindle with Lubricating Oil.
	Excessive Oil Drip Rate flooding the bearings.	Oil drip rate exceeds the recommended amount. Adjust for the proper Oil Drip Rate.
	Over filled lubricator. 	Drain the Lubricating Oil from Reservoir to meet indicated levels. Excess lubricant will flood spindle. → Draining the Lubricating Oil until upper limit below by opening the Drain Valve.
Overheating during rotation.	Cutting debris has contaminated the ball bearings, and the ball bearings are damaged.	Replace the ball bearings. (Return to NAKANISHI dealer service.)
Abnormal vibration or noise during rotation.	The shank of the grindstone is bent or the grindstone need to be dressed.	Replace or dress the grindstone.
	Cutting debris has contaminated the ball bearing.	Replace the ball bearings. (Return to NAKANISHI dealer service.)
	The spindle ball bearings have been damaged.	
Grindstone slippage.	Collet or collet nut is not correctly installed.	Check and clean the collet and collet nut. Reinstall the collet and collet nut.
	The collet and the collet nut are worn. Incorrect collet size for the grindstone shank.	Replace the collet and collet nut.
High run-out.	The grindstone shank is bent.	Change the grindstone.
	Collet nut is not correctly installed.	Secure the collet and the collet nut correctly.
	The collet and the collet nut are worn. Incorrect collet size for the grindstone shank.	Replace the collet and the collet nut.
	Inside of the spindle is worn.	Replace the spindle shaft. (Return to NAKANISHI dealer service.)
High run-out.	Contaminants inside the collet and the collet nut or the spindle.	Clean the collet, collet nut and the inside of the taper and spindle.
	The spindle ball bearings have been damaged.	Replace the ball bearings. (Return to NAKANISHI dealer service.)

Refer to the Air Line Kit (AL - M1202) Operation Manual.

17. DISPOSAL OF THE AIR TURBINE SPINDLE

When disposal of this Air Turbine Spindle is necessary, follow the instructions from your local government agency for proper disposal of industrial components.

株式会社ナカニシ
www.nakanishi-inc.com

本社・工場
〒322-8666 栃木県鹿沼市下日向 700
TEL：0289(64)3380 FAX：0289(62)5636

NAKANISHI INC.
www.nakanishi-inc.com
700 Shimohinata, Kanuma, Tochigi 322-8666, Japan

NSK America Corp
www.nskamericacorp.com
1800 Global Parkway, Hoffman Estates, IL 60192, USA

2017.07.18 001 Ⓚ